OLON®

IT ALL COMES TOGETHER

ACCESSORY MOULDING PROGRAM

Olon presents 14 beautiful and versatile accessory mouldings that reflect multiple trends, are available in 200+ TFL & HPL colours and can be combined into even more exciting moulding build-ups to accentuate all your furniture and cabinet building needs.

ACCESSORY MOULDINGS

CPD95 / UPD95 PROGRAM

See your CPD95 or UPD95 price pages for more information.

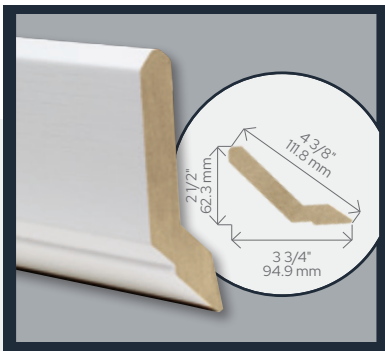

Shaker Crown - 4/box 4716

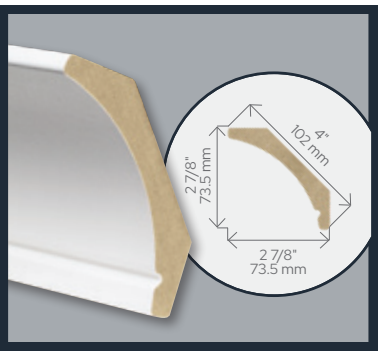

Contemporary Cornice - 4/box 4766

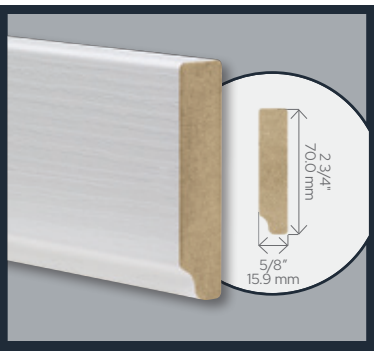

Light Shield - 6/box 4022

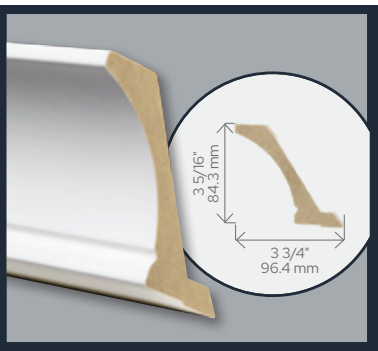

Contemporary Crown - 4/box WP22

Olon profiles offer the most complete program wrapped with our NEXGEN® laminates. They are available in 14 stock profile styles in exact matches to over 200+ North American TFL & HPL colours and perfectly complete our 5 piece door program.

For a complete list of available colours, please consult the CPD95 and UPD95 colour lists available on our website at **www.olon.com.**

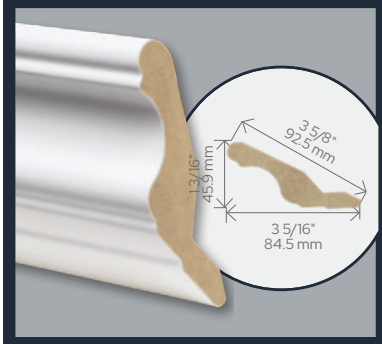

Colonial Crown - 6/box 4021

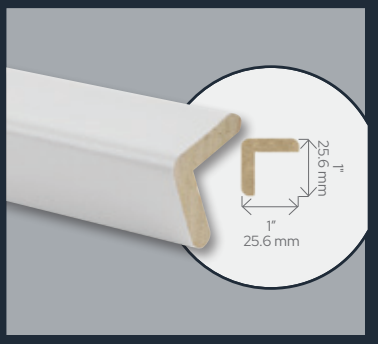

Outside Corner - 30/box 4439

NEXGEN® Technology

Olon's unique trademarked laminate process, NEXGEN®, uses TFL (Melamine) and HPL décor paper saturated with specialty resins that allow the laminate to be very flexible while maintaining the colour as well as the heat & wear resistance of TFL. This formulation allows Olon to provide a pre-finished product with synergistic products to the woodworking industry with the following features:

- Perfect match with no discoloration or fading over time
- Exceeds CARB2 emission norms
- Antimicrobial protection, resistance against bacterial growth on the surface
- Surface performance comparable to TFL & Vertical Grade HPL
- Delamination resistant in high heat environments
- Outperforms vinyl, foils and topcoated papers

OLON MOULDINGS ARE VERY VERSATILE AND MANY HAVE ALTERNATIVE USES:

Profile	Crown Moulding	Light Shield	Baseboard	Outside Corner	Inside Cove	Batten	Reversible
4021	X						
4022	X	X	X				X
4439		X		X			
4632						X	
4634	X						
4716	X						
4766	X						
4870	X	X					
4869	X	X					
4871	X	X					X
4872	X						
4873	X	X	X				
5027	X						
WP22	X						

CPD94 / UPD94 PROGRAM

See your CPD94 or UPD94 price pages for more information.

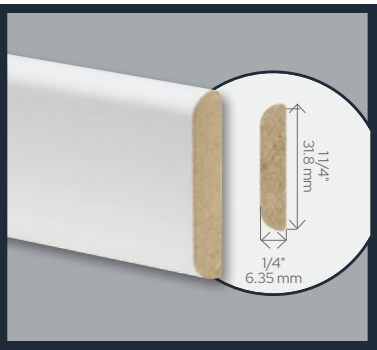

Batten - 12/box 4632

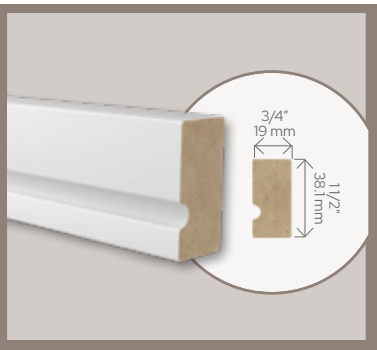

Detailed Light Shield - 6/box 4870

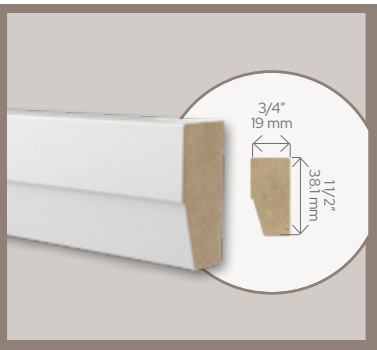

Angled Light Shield - 6/box 4871

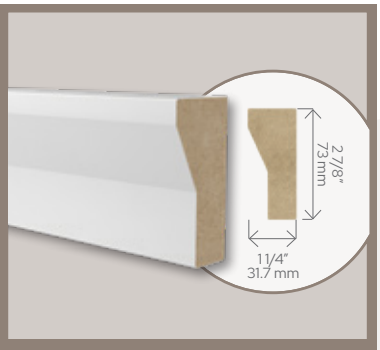

Angled Crown - 4/box 4869

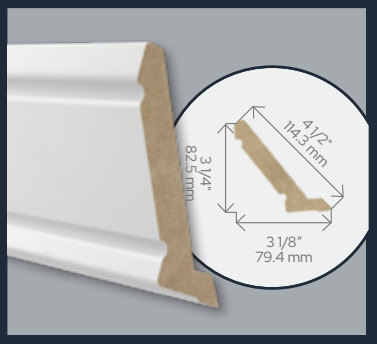

Detailed Crown - 4/box 4872

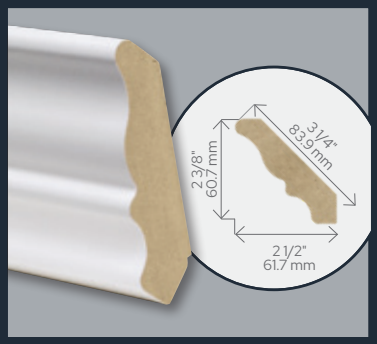

Medium Cornice - 6/box 5027

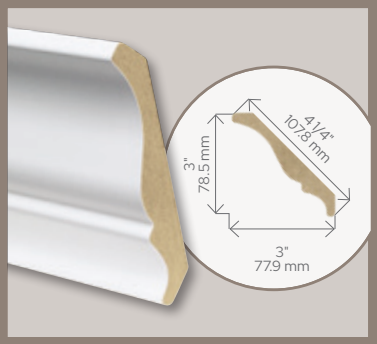

Large Cornice - 6/box 4634

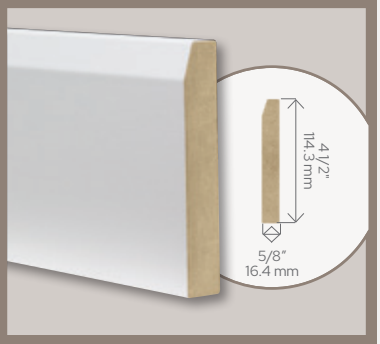

Baseboard - 4/box 4873

COLLECTIONS

Olon has built the accessory moulding program to coordinate with NEXGEN® 5 Piece door profiles. Shown here are our most popular door styles coordinated with moulding of a similar style.

Please note: By mixing and matching from each collection, you'll create a unique masterpiece.

COLLECTION 1 – SHAKER

Crown Moulding	Door Profiles	Light Shield	Baseboard
4716	4459	4870	4873
4872	4546	4871 REVERSED	–
4873	4845	4022 REVERSED	–

COLLECTION 2 – TRANSITIONAL

Crown Moulding	Door Profiles	Light Shield	Baseboard
4766 / WP22	4741	4871	4873
4869	4804	–	–
4634	4845	–	–
–	4839	–	–

COLLECTION 3 - CLASSIC

Crown Moulding	Door Profiles	Light Shield	Baseboard
5027	4300	4022	4873
4021	4805	–	4022
–	4347	–	–

MOULDING BUILD-UPS

If you are going to make a statement don't limit yourself to one moulding, make fantastic combinations for unique and beautiful finishes. Consult www.olon.com to see the many variations that can be made with our 14 versatile profiles. Here are a few examples....

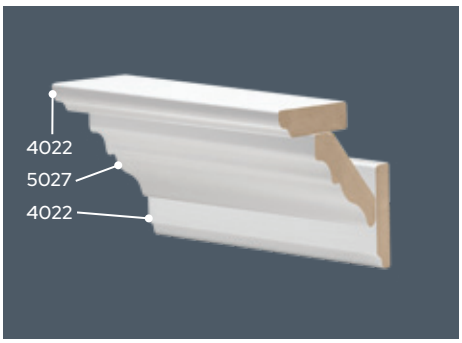

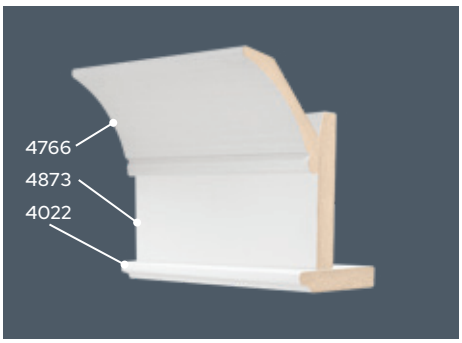

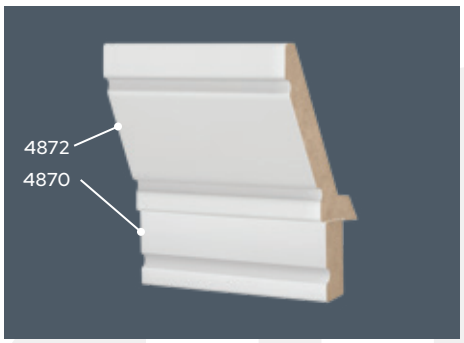

ONE-STOP-SHOP

Olon is a true one-stop-shop and offers a number of products to meet your furniture and cabinet building needs. For more information on any of the items below, please consult our website at www.olon.com or contact your local Sales Representative.

- NEXGEN® & Custom Wrapped 5 Piece Door Mouldings
- NEXGEN® & Custom Wrapped Accessory Mouldings
- PÜRDECO™ Laminated Panels & Components
- NEXGEN® LINK25 & Custom Formable Laminate
- NEXGEN® Edgebanding
- Miterfold Drawers
- Solid Wood & Plywood Drawers

LOCATIONS

GEORGETOWN, ON

Tel: (800) 387-2319
Fax: (905) 877-7383

NEXGEN® & VelourTouch™ Profile Wrapped Mouldings

PÜRDECO™ Laminated Panels & Components

GENEVA, IL

Tel: (630) 232-4705
Fax: (630) 232-4719

NEXGEN® LINK25 Formable Laminate

NEXGEN® Edgebanding

Custom Laminates

JEFFERSONVILLE, IN

Tel: (812) 256-6400
Fax: (812) 256-6450

Assembled 5 Piece & Slab Doors

NEXGEN® & VelourTouch™ Profile Wrapped Mouldings

PÜRDECO™ Laminated Panels & Components

WASHINGTON, IN

Tel: (800) 522-8521
Fax: (812) 254-2981

Miterfold & KD Drawer Components

LEXINGTON, NC

Tel: (336) 357-0777
Fax: (336) 357-0570

Wood Drawer Components

OLON®

ACCMLDGBRO/22